“CHIAVETTE SDR”

tanta radio per pochi soldi

IW0HK Andrea
IZ0MJE Stefano

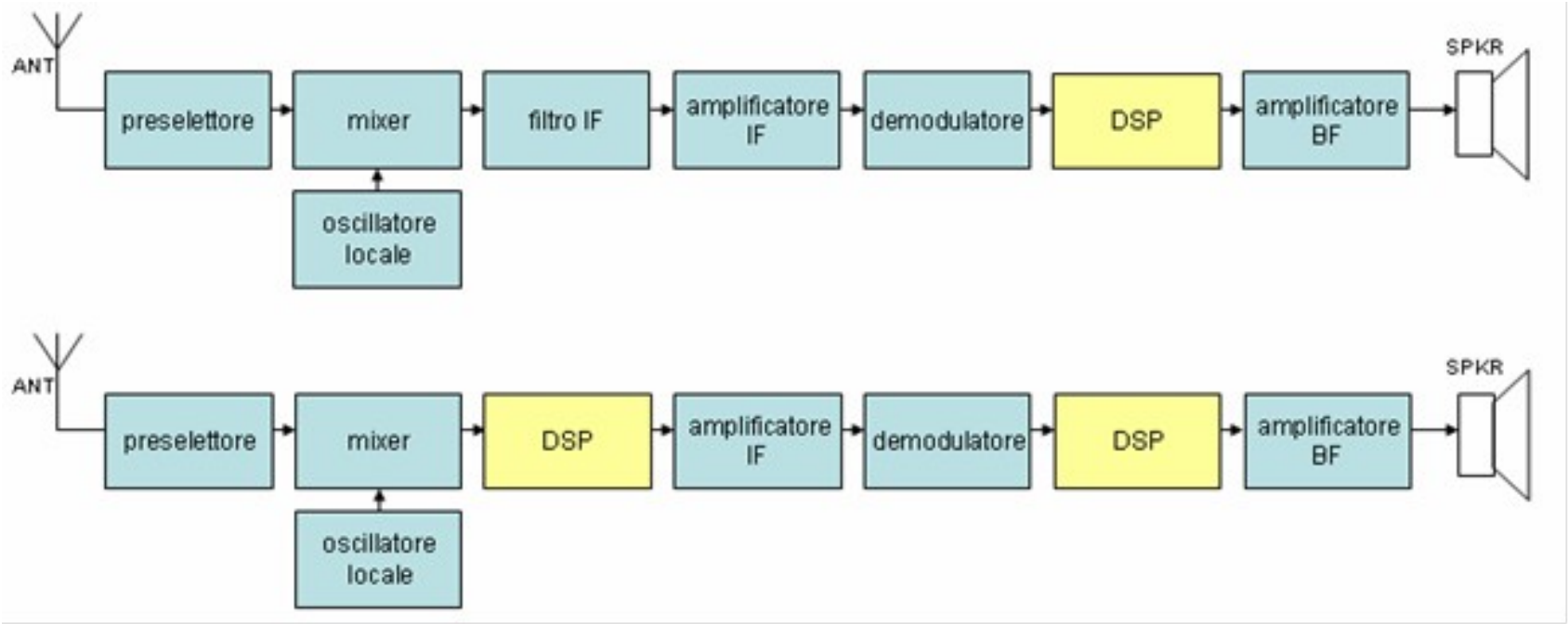
ANT
preselettore
mixer
filtro IF
amplificatore IF
demodulatore
DSP
amplificatore BF
SPKR
oscillatore locale
ANT
preselettore
mixer
DSP
amplificatore IF
demodulatore
DSP
amplificatore BF
SPKR
oscillatore locale

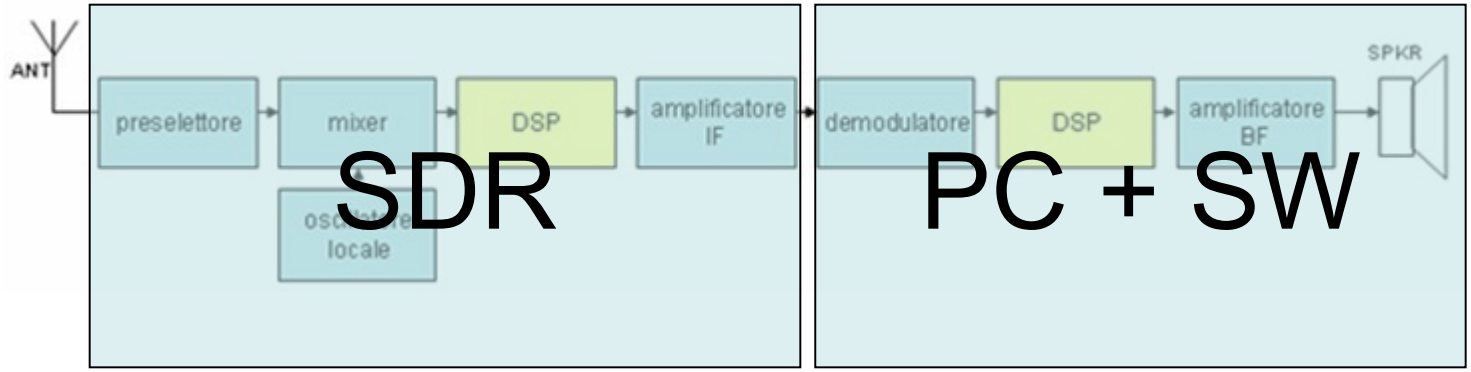
ANT
preselettore
mixer
DSP
amplificatore IF
demodulatore
DSP
amplificatore BF
SPKR
locale
SDR
PC + SW

SoftRock

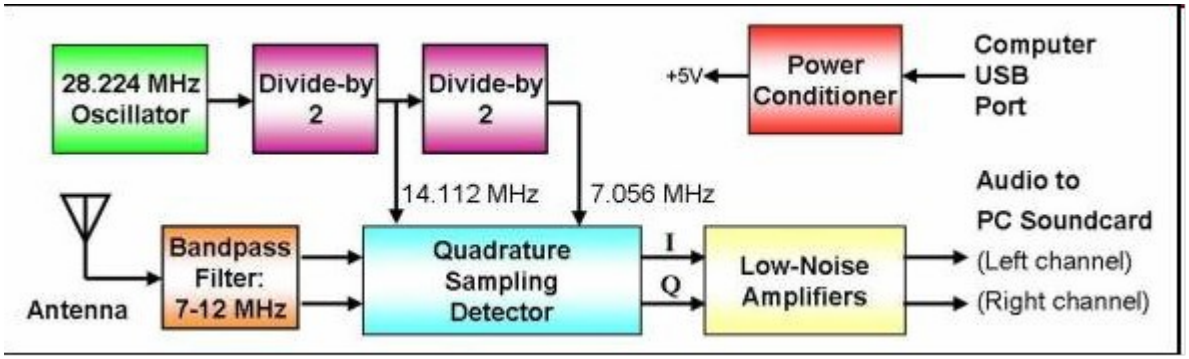

Principali vantaggi:

• la radio non è vincolata ad unico software DSP: unicamente tramite software la radio può assumere diverse “personalità”, dal ricevitore da salotto a quello ultraspecializzato per modi digitali

• hardware e software possono essere sostituiti indipendentemente

• è facile aggiungere nuove funzioni via software e quindi la radio ha tempi di obsolescenza minori

Universal Software Radio Peripheral

€1500

(moduli rf intercambiabili, rtx full duplex, network….)

FUNCUBE DONGLE

€150

(rx only, versione originale solo V/UHF)

DISPOSITIVI PER DVB-T E DAB

€15/25

(rx only, solo V/UHF)

FunCube Dongle

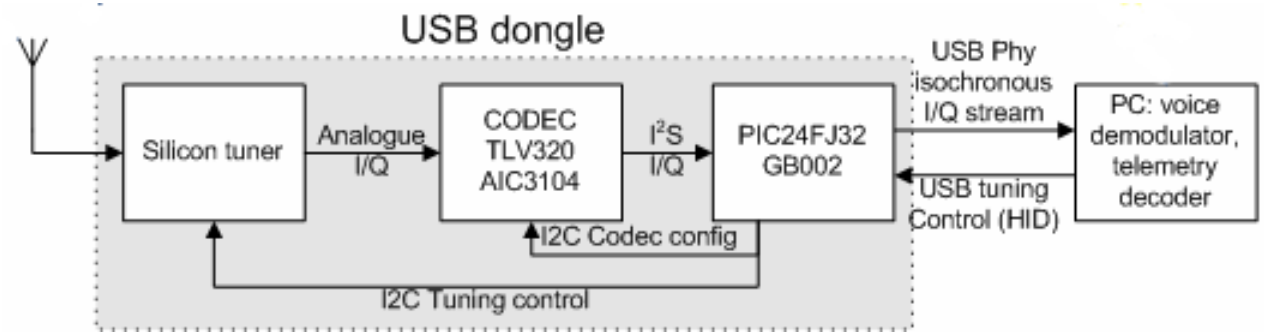

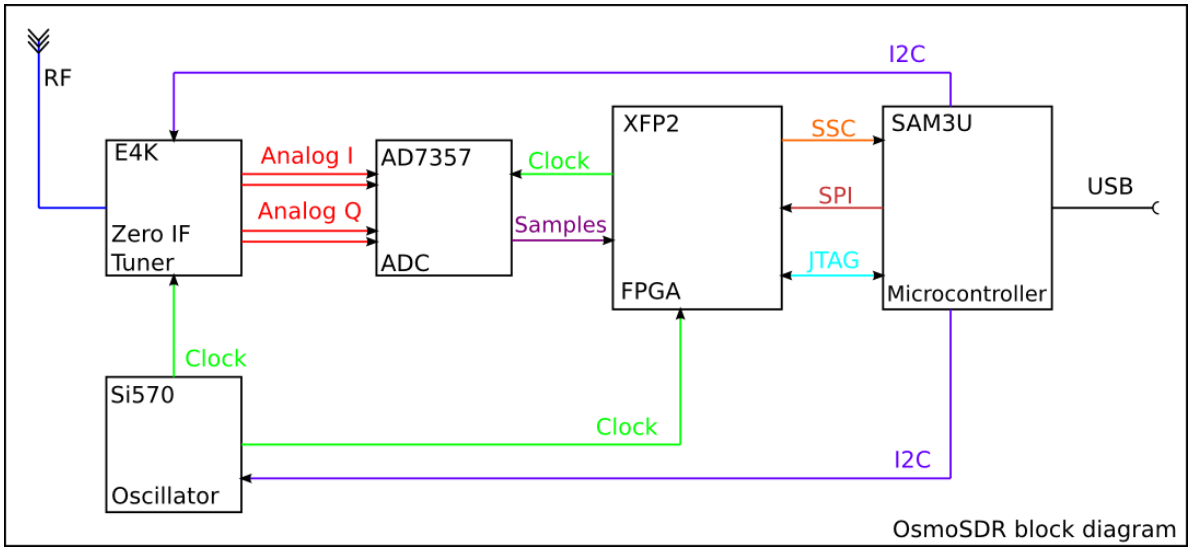

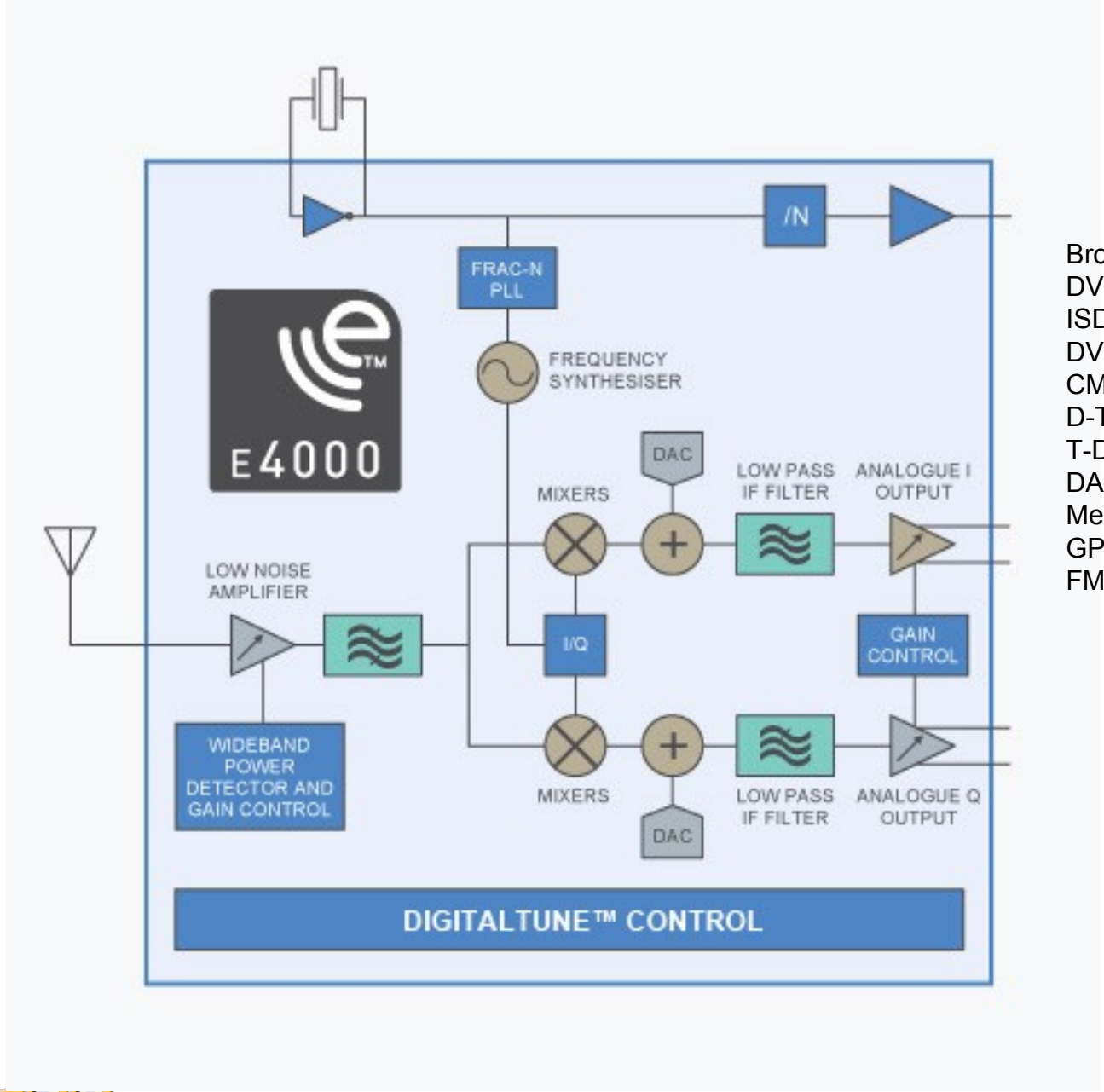

Broadcast Standards
DVB-T (174-240MHz, 470-854MHz)
ISDB-T (470-862MHz)
DVB-H (470-854MHz, 1672-1678MHz)
CMMB (470-862MHz)
D-TMB (470-862MHz)
T-DMB (174-240MHz, 1452-1492MHz)
DAB (174-240MHz, 1452-1492MHz)
MediaFLO (470-862, 1452-1492MHz)
GPS L1 band (1575MHz)
FM radio (64-108MHz)

Differential Input, Dual, Simultaneous Sampling, 4.2 MSPS, 14-Bit, SAR ADC

AD7357

FEATURES

Dual 14-bit SAR ADC
Simultaneous sampling
Throughput rate: 4.2 MSPS per channel
Specified for a V_{DD} of 2.5 V
Power dissipation: 36 mW at 4.2 MSPS
On-chip reference: 2.048 V ± 0.25%, 6 ppm/°C
Dual conversion with read
High speed serial interface
  SPI-/QSPI-/MICROWIRE-/DSP-compatible
−40°C to +125°C operation
16-lead TSSOP package
Qualified for automotive applications

APPLICATIONS

Automotive radar
Data acquisition systems
Motion control
I and Q demodulation
RFID readers

FUNCTIONAL BLOCK DIAGRAM

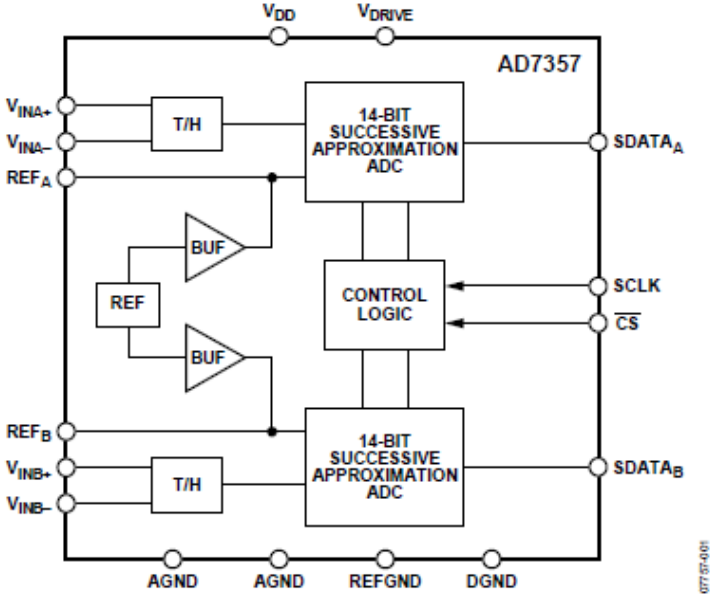

Figure 1.

noxon dab | eBay - Mozilla Firefox

File Modifica Visualizza Cronologia Segnalibri Strumenti Aiuto

noxon dab | eBay

www.ebay.it/sch/i.html?_trksid=p5197.m570.l1313&_nkw=noxon+dab%2B&_sacat=0&_from=R40

gnuradio companion

19 oggetti trovati dai venditori eBay internazionali

Terratec NOXON DABStick DAB DAB+ USB Stick

Luogo: Germania
Negozio: Wolffstore
ID utente del venditore: wolffstore_gmbh
Feedback: 158.573 | 99,6%

Affidabilità Top

6 offerte

EUR 9,55
+EUR 14,95 spedizione

3h 24m

Noxon DAB/DAB+ USB Radio Stick für PC & Notebook

Luogo: Germania
Negozio: dayby-shop
ID utente del venditore: seller-dayby
Feedback: 18.595 | 99,5%

Compralo Subito

EUR 22,90
+EUR 6,90 spedizione

Terratec Noxon DAB Stick DAB-Stick

Luogo: Germania
Negozio: digi-techx
ID utente del venditore: digi-techx
Feedback: 11.774 | 99,1%

Compralo Subito

EUR 29,27
+EUR 26,00 spedizione

MODELLI ADATTI

VID	PID	tuner	device name
0x0bda	0x2832	all of them	Generic RTL2832U (e.g. hama nano)
0x0bda	0x2838	E4000	ezcap USB 2.0 DVB-T/DAB/FM dongle
0x0ccd	0x00a9	FC0012	Terratec Cinergy T Stick Black (rev 1)
0x0ccd	0x00b3	FC0013	Terratec NOXON DAB/DAB+ USB dongle (rev 1)
0x0ccd	0x00d3	E4000	Terratec Cinergy T Stick RC (Rev.3)
0x0ccd	0x00e0	E4000	Terratec NOXON DAB/DAB+ USB dongle (rev 2)
0x185b	0x0620	E4000	Compro Videomate U620F
0x185b	0x0650	E4000	Compro Videomate U650F
0x1f4d	0xb803	FC0012	GTek T803
0x1f4d	0xc803	FC0012	Lifeview LV5TDeluxe
0x1b80	0xd3a4	FC0013	Twintech UT-40
0x1d19	0x1101	FC2580	Dexatek DK DVB-T Dongle (Logilink VG0002A)
0x1d19	0x1102	?	Dexatek DK DVB-T Dongle (MSI DigiVox? mini II V3.0)
0x1d19	0x1103	FC2580	Dexatek Technology Ltd. DK 5217 DVB-T Dongle
0x0458	0x707f	?	Genius TVGo DVB-T03 USB dongle (Ver. B)
0x1b80	0xd393	FC0012	GIGABYTE GT-U7300
0x1b80	0xd394	?	DIKOM USB-DVBT HD
0x1b80	0xd395	FC0012	Peak 102569AGPK
0x1b80	0xd39d	FC0012	SVEON STV20 DVB-T USB & FM

http://sdr.osmocom.org/trac/wiki/rtl-sdr

SDR

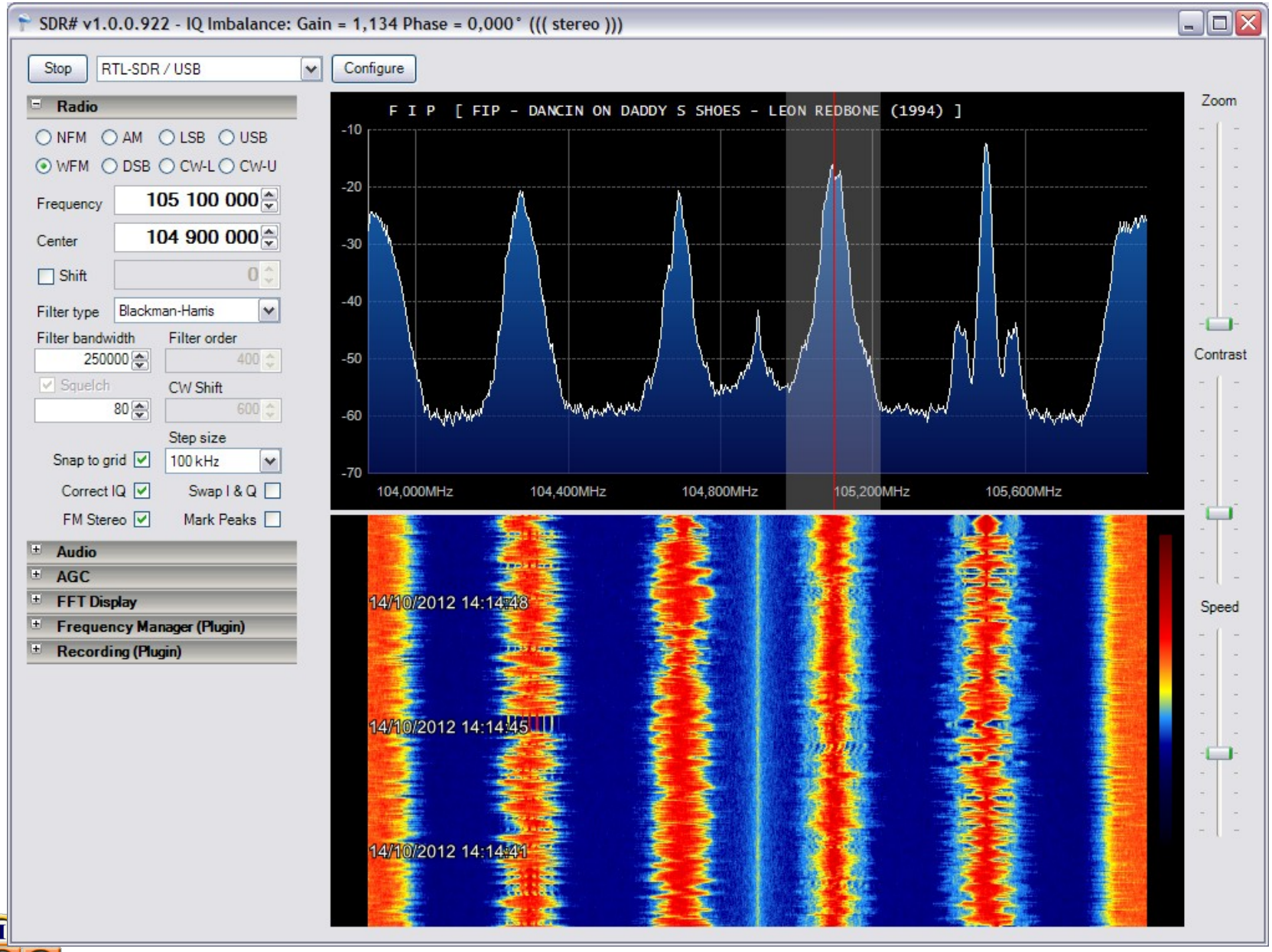

http://sdrsharp.com/

GNURADIO

GRC - Editing: /home/jblum/proj/gnuradio/grc/examples/usrp/usrp_wbfm_receive.grc*

File Edit Build Options Help

dial_tone | usrp_wbfm_receive*

Options
ID: top_block
Title: USRP WBFM Receive
Author: Example
Description: WBFM Receive with Basic RX o...
Window Size: 1280, 1024
Generate Options: WX GUI

Variable
ID: decim
Value: 200

Variable Slider
ID: volume
Label: Volume
Default Value: 1
Minimum: 0
Maximum: 10
Num Steps: 100
Slider Type: Horizontal
Grid Position: 1, 1, 1, 2

Variable Slider
ID: freq
Label: Frequency
Default Value: 100
Minimum: 87.5
Maximum: 108
Num Steps: 1000
Slider Type: Horizontal
Grid Position: 0, 0, 1, 2

USRP Source
Unit Number: 0
Subdev Spec: Auto
Frequency: 100000000
Decimation: 200
Gain: 20
Mux: 0x0
Auto T/R: Ignore
RX Antenna: Ignore
out

Variable Slider
ID: fine
Label: Fine Freq
Default Value: 0
Minimum: -0.1
Maximum: 0.1
Num Steps: 100
Slider Type: Horizontal
Grid Position: 0, 2, 1, 2

in **WBFM Receive** out
Quadrature Rate: 320000
Audio Decimation: 10

in **Multiply Const** out
Constant: 1

in **FFT Sink**
Title: FFT Plot
Sample Rate: 320000
Baseband Freq: 0
Y per Div: 10
Y Divs: 8
Reference Level: 50
FFT Size: 512
Refresh Rate: 15
Average Alpha: 0
Average: No
Peak Hold: No
Grid Position: 2, 0, 2, 4

Audio Sink in
Sample Rate: 32KHz
Device Name:
OK to Block: Yes

Showing: "/home/jblum/proj/gnuradio/grc/examples/usrp/usrp_wbfm_receive.grc"

Showing: "/home/jblum/proj/gnuradio/grc/examples/usrp/usrp_two_tone_loopback.grc"

Showing: "/home/jblum/proj/gnuradio/grc/examples/usrp/usrp_wbfm_receive.grc"

Blocks
- [Sources]
- [Sinks]
- [Graphical Sinks]
- [Operators]
- [Type Conversions]
- [Stream Conversions]
- [Misc Conversions]
- [Synchronizers]
- [Level Controls]
- [Filters]
- [Modulators]
  - VCO
  - Frequency Mod
  - Phase Mod
  - Quadrature Demod
  - CPFSK
  - Differential Phasor
  - Constellation Decoder
  - Differential Encoder
  - Differential Decoder
  - WBFM Transmit
  - WBFM Receive
  - WBFM Receive PLL
  - NBFM Transmit

Add

http://gnuradio.org/redmine/projects/gnuradio/wiki

ATV in formato DVB

… con USRP non chiavetta!

UVC webcam
High Definition

Linux
Gstreamer
GNU Radio

USRP

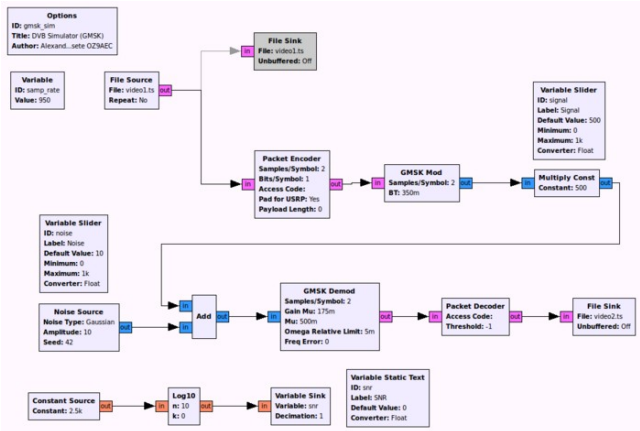

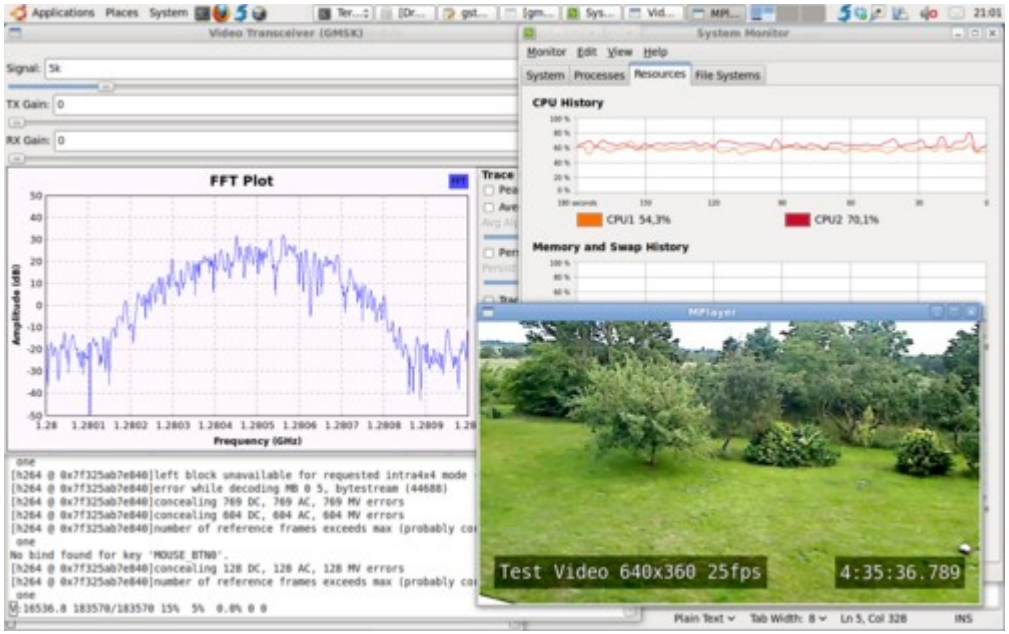

http://wiki.oz9aec.net/index.php/Simple_DVB_with_Gstreamer_and_GNU_Radio

The Comprehensive GNU Radio Archive Network

Login | Preferences | Help/Guide | About Tr

Wiki | Timeline | Roadmap | Browse Source | View Tickets | Search

Start P

Applications

- DttSP - sdr-core (low-latency full duplex SDR transceiver), vr (virtual radio control and application environment)
- Split-functionality MACs - a CSMA and TDMA MAC for GNU Radio, and platform to build additional MACs
- Dynamic Spectrum Sharing - Implementation of Papyrus/Jello, a dynamic spectrum sharing system based on distributed OFDMA.
- Two-Way Relaying with Network Coding - An Implementation of relaying between two nodes with the help of USRPs.
- Over-the-air reconfiguration - A Demonstrator showing over-the-air reconfiguration for cognitive radio terminals using GNU Radio and USRPs.
- Wifi Localization - Localization software for use with BBN 802.11 (USRP2 version) or another communications system.
- simple_ra - A simple Radio Astronomy application to replace gr-radio-astronomy
- Open Relaying Demonstrator - Platform for the evaluation of cooperative relaying strategies

Protocol-Specific Decoders/Encoders

802.x Family

- FTW IEEE802.11 OFDM frame encoder - Transmit standard compliant IEEE802.11a/g/p frames using the USRP2
- BBN 802.11 - 802.11 code from BBN and the ADROIT project
- SPAN 802.11b Receiver - a full-bandwidth 802.11b receiver.
- UCLA ZigBee PHY - implementing 802.15.4 to inter-operate with Mica2, MicaZ, and Telos B motes.
- RSSI-based 802.15.4 localization - 802.15.4 receiver with RSSI feature added, and application code for channel estimation, ranging and localization

https://www.cgran.org/wiki/Projects

Consumer Related

- gr-bluetooth - A Bluetooth baseband decoder, implementing packet sniffing and analysis (receive only)
- Gen 2 RFID - A Gen 2 RFID monitoring system and reader, along with USB subsystem modifications that reduce system latency
- Gen2 RFID Listener - A Gen2 RFID Listener for developing distributed RFID networks and monitoring systems.
- Logitech27MHzTransceiver - Transceiver for 27 MHz wireless keyboards from Logitech
- Dect Receiver - Dect Receiver implementing PHY, MAC and limited subset of upper layers

Industry-Related Standards

- openLTE - Implementation of the 3GPP LTE specifications currently focused on downlink physical layer transmission and reception
- Radio Data System - receiving the RDS signal of European FM broadcasters
- GMSK Spacecraft Groundstation - S/C groundstation transceiver using IP encapsulated in MPoFR.
- Motorola Smartnet Trunking Receiver - Receiver for Motorola Smartnet trunked systems
- Funcube Dongle Source - Included in GNU Radio since version 3.5.3
- Mode S receiver - A Mode S/ADS-B receiver to track commercial aircraft from transponder reports
- AIS - Automatic Identification System receiver for VHF shipborne position reporting
- ESTCube-1 Receiver - Receiver for ESTCube-1 satellite, launched in 2013. Includes AX.25 decoder.
- ACARS - ACARS receiver, used by aircrafts in the VHF band.

Measurement Tools

- USRP Fading Simulator - introduces a simulated Raleigh fading channel model
- Spectral Estimation Toolbox - Adds routines for spectral estimation to GNU Radio
- Compressed Sensing Toolbox - Adds compressive sensing features to GNU Radio
- Channel Coding Toolbox - Provides several codes & tools for dealing with channelcoding-issues
- Graphical Channel Simulator - A tool to benchmark software modulators and demodulators in channels subject to different types of degradation

Platform Tools

- Architecture Latency Measurements - measuring various latencies between GNU Radio and the USRP.
- gcellized FFTW - Extend FFTW to use gcell on the Cell processor
- Development Tools - Tools, scripts and stuff that helps develop GNU Radio applications.
- Stream Tagging Tools - A growing collection of blocks relating to handling tags
- Linear Algebra Toolbox - Adding convenient LAPACK/BLAS wrappers to GNU Radio.
- IT++ Wrappers - Integrate IT++ functions in GNU Radio
- mediatools - Adds a collection of audio and video processing blocks to GNU Radio
- gr_iqtx - A tool for sending generic I/Q data from a FIFO, and providing various analysis options

Ricezione traffico digitale via satellite Inmarsat-C

http://www.youtube.com/results?search_query=rtl+sdr+in

Convertitore per HF (€45) con switch automatico antenna

http://www.ct1ffu.com/site/index.php?option=com_content&view=article&id=178:converter&catid=38:artigos

Ricezione e decodifica real time segnali GPS

http://gnss-sdr.org/node/50

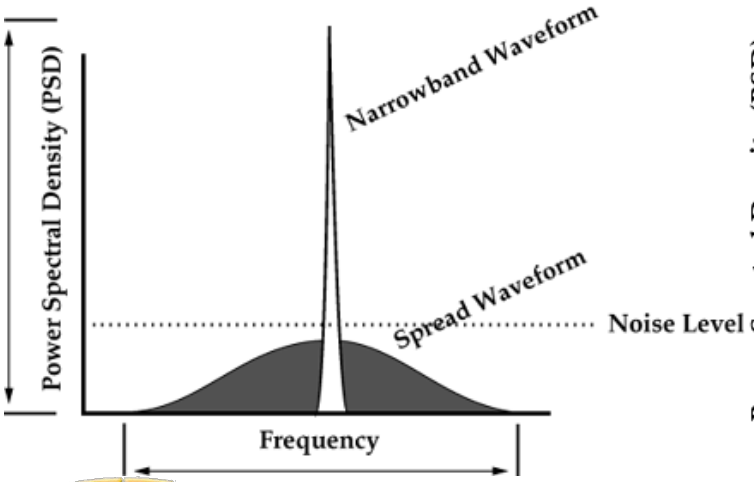

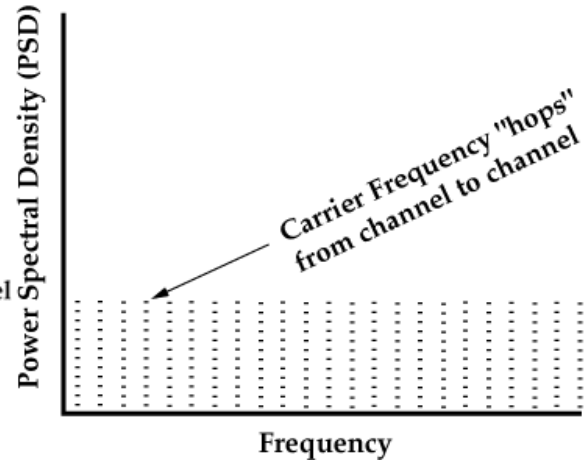

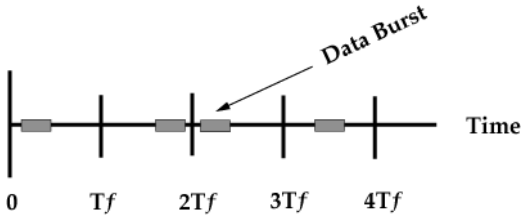

http://www.tapr.org/ss_intro.html

RX panoramico 10 GHz

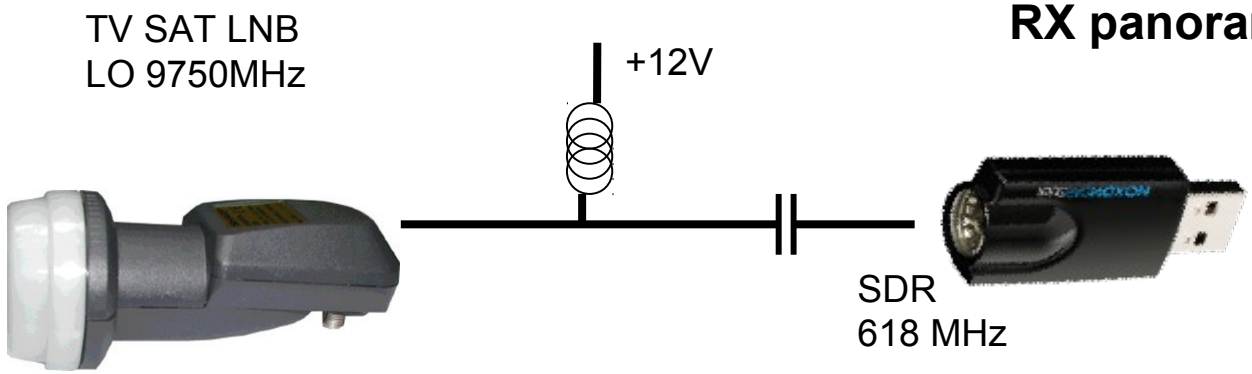

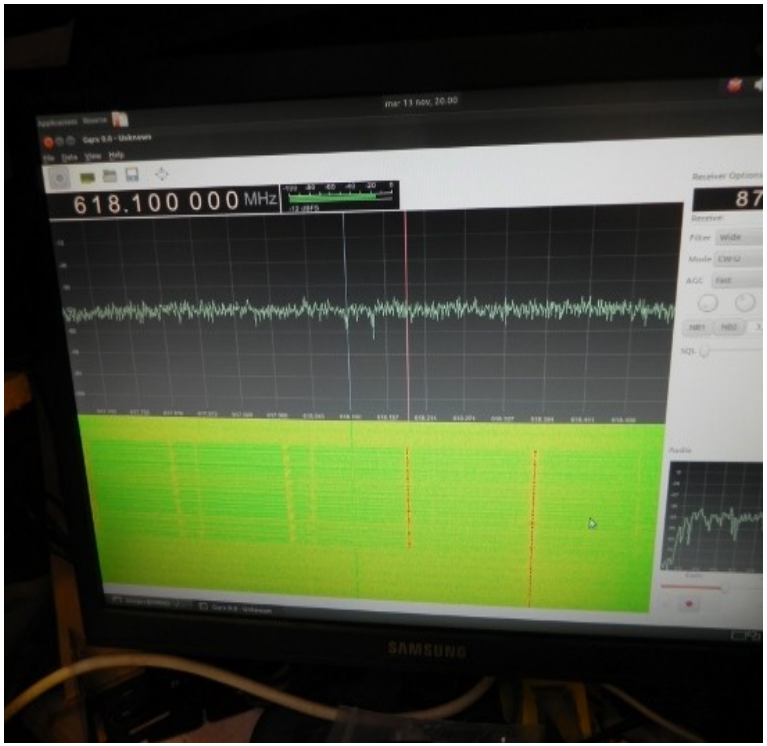

http://youtu.be/UPiTAtyvY8E

Ricezione e decodifica ADS-B

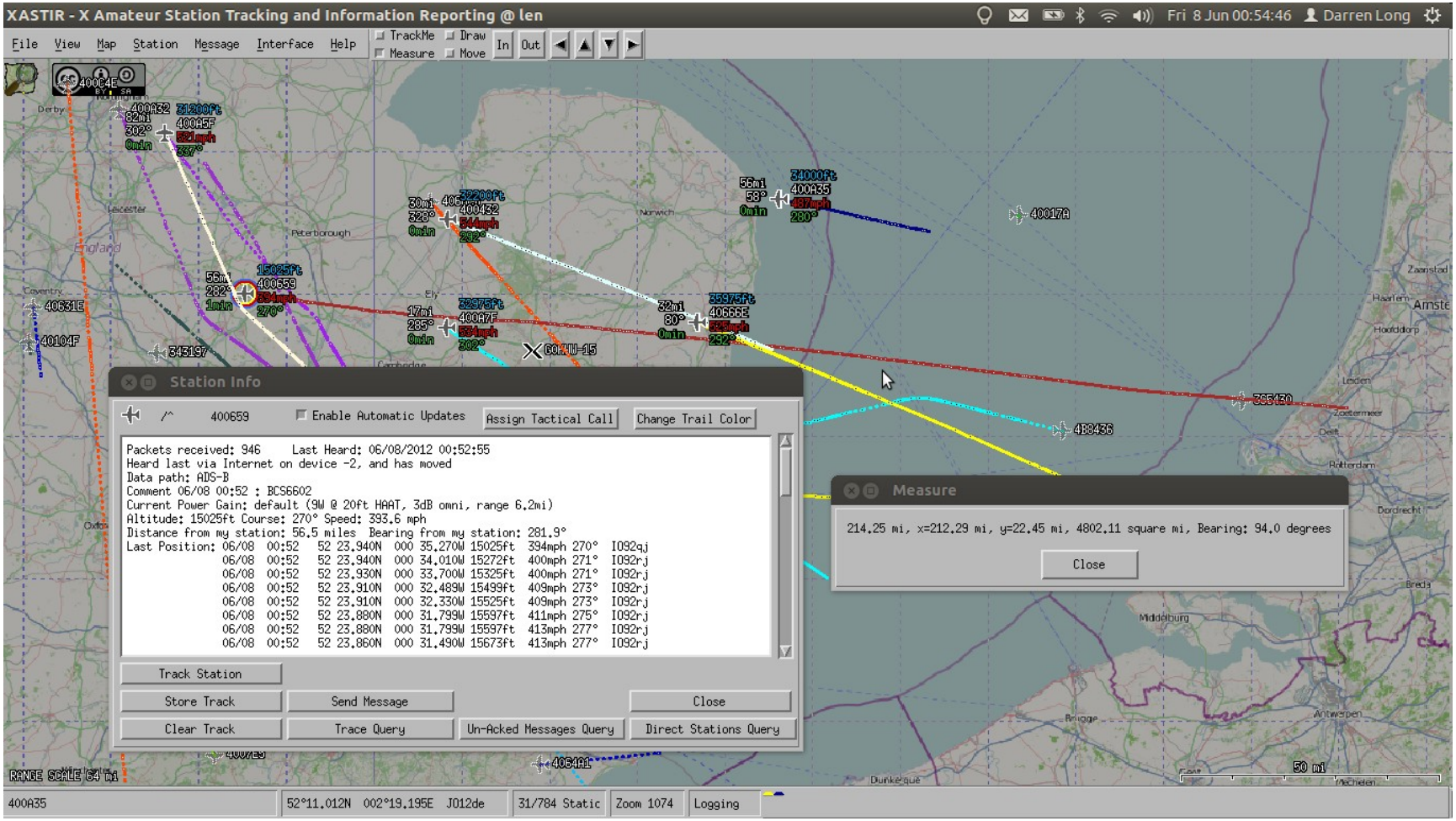

http://www.hamradioscience.com/the-rtl-2832u-sdr-and-ads-b/